T300 Linear Actuator

General Features:

- Voltage of motor: 24VDC
- Maximum load(push): 3000N
- Maximum load(pull): 2000N
- Maximum speed: 40mm/s
- Min Mounting Dimension: Stroke+100
- Built-in end stop switches(not adjustable)
- Color: Black Or Grey
- Protection class: IP20
- Duty cycle : 10% or 2 min.
  continuous use followed by 18 min. not in use
- Flexible front fixture
- IEC60601-1, ES60601-1

Option Features:

- Protection class: IPX4
- Safety option: 1. Safety nut
  2. Mechanical splines
- Special option: 1. Quick retracting
  2. Quick release
  3. flexible piston rod eye
- Position signal: hall sensors
- Stroke tube: 1.Stainless steel tube
  2.Steel tube with wear-resistant powder painted
  3.Aluminium tube with surface handled
- Voltage: 1.12VDC
  2.36VDC

DATA SHEED

HEDRON

Linear Actuator

Load and Speed

CODE	Maksimum Load (N)		Self Lock (N)	Full Load Current (A)	Velocity(mm/s)	
	Push	Pull			No Load	Rated Load
A	3000	2500	2500	2.5	5	3.4
B	2500	2500	2500	2.4	6	4.1
C	2000	2000	2000	2.4	7.5	5.2
D	1500	1500	1500	2.3	10	6.8
E	1000	1000	1000	2.3	15	10.5
F	750	750	750	2.3	20	14

Remark: Above data bases on 3200 RPM Motor tested under rated 24VDC

Drawing

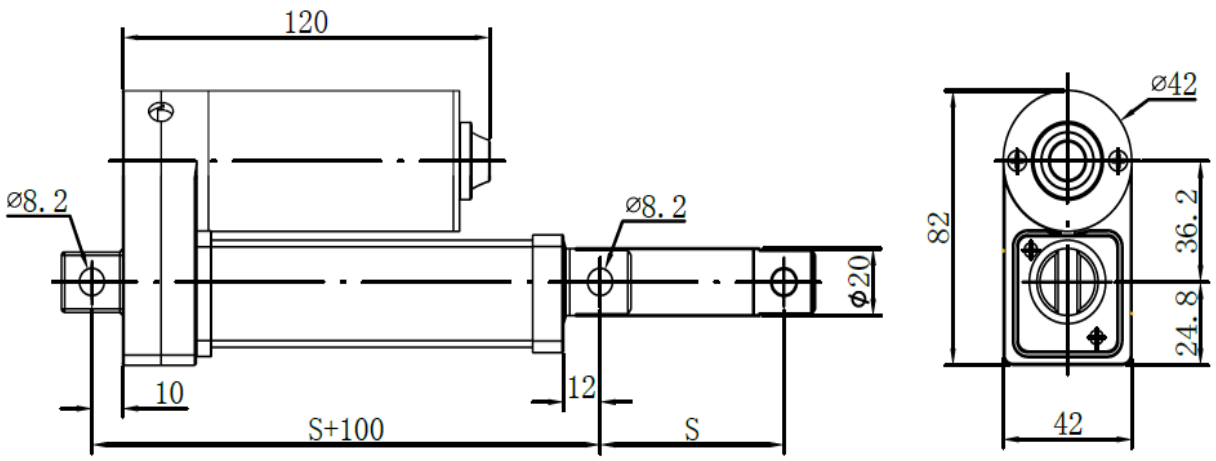

Ordering Example;

T300-24-A-200-1-0-1-1-1-2-1

Sealing cover	1.Without sealing cover 2.With black sealing cover
Protection class	1.IPX4 2.IPX6
Self Locking	0-Without self lock 1.Self locking(push) 2.Self locking(pull)
Speciial option	0.Without quickly release 1.Quickly release with manual drive 2. Quickly release with cable pull type
Safety option	0.Without safety nut 1.Safety nut(push) 2.Safety nut(pull) 3.Push only+safety nut(pusdh)
Output signals	0.Without hall sensor 1.One hall sensor 2.Two hall sensor
Direction of back fixture (Counterclockwise)	1.0° 2.90°
Stroke	S (min. mounting dimension:150+S)
Load and Speed:	See appendix
Voltage	1. 12V 2. 24V 3. 36V